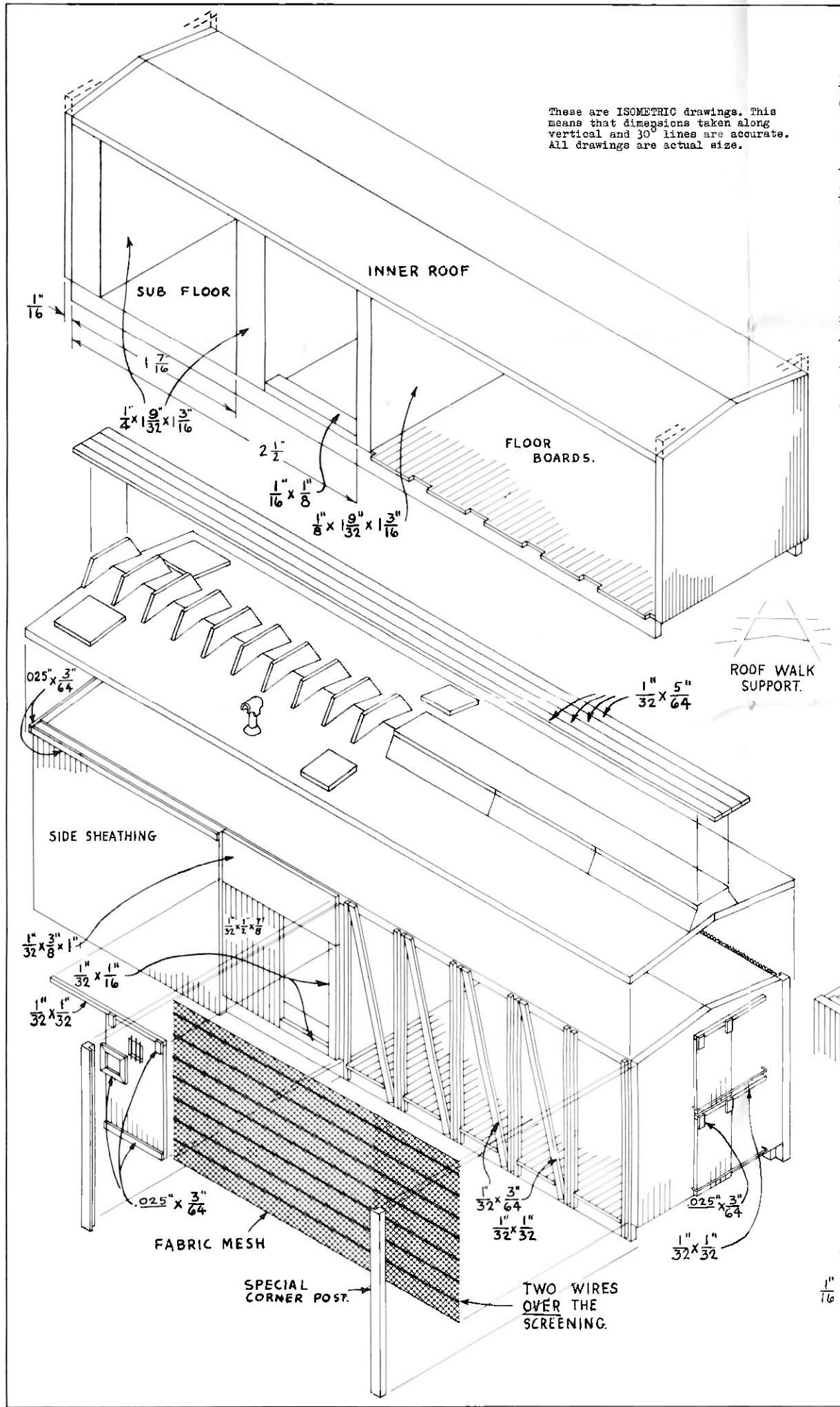

These are ISOMETRIC drawings. This means that dimensions taken along vertical and 30° lines are accurate. All drawings are actual size.

DECALS

PAINT A semi-gloss finish is best for applying decals. They may not stick on a very flat (dull) surface. To obtain a semi-gloss finish, mix 20 to 25% glaze (gloss) in your flat paint. NEVER apply a decal until the paint is thoroughly dry.

TRIM decal close to lettering to eliminate excess film.

DIP in water for 5-10 seconds and set aside on a blotter until it "straightens out". DON'T let the decal float around in a dish of water, as this will wash off all the adhesive. Stubborn decals will usually respond to warm water with a few drops of ammonia added.

SLIDE the decal off the paper, face up, into position. If necessary to move it, apply an additional drop of water with a tooth pick and use the tooth pick to move it.

SOAK UP excess water with the corner of a blotter or edge of tissue.

SOLVASET (W. K. Walthers) applied to the decal (directions on bottle) will snug it down into crevises and around rivets etc.

DDV (Walthers), a special flat finish, applied to entire model, decal and all, will give the entire model a uniform dull finish.

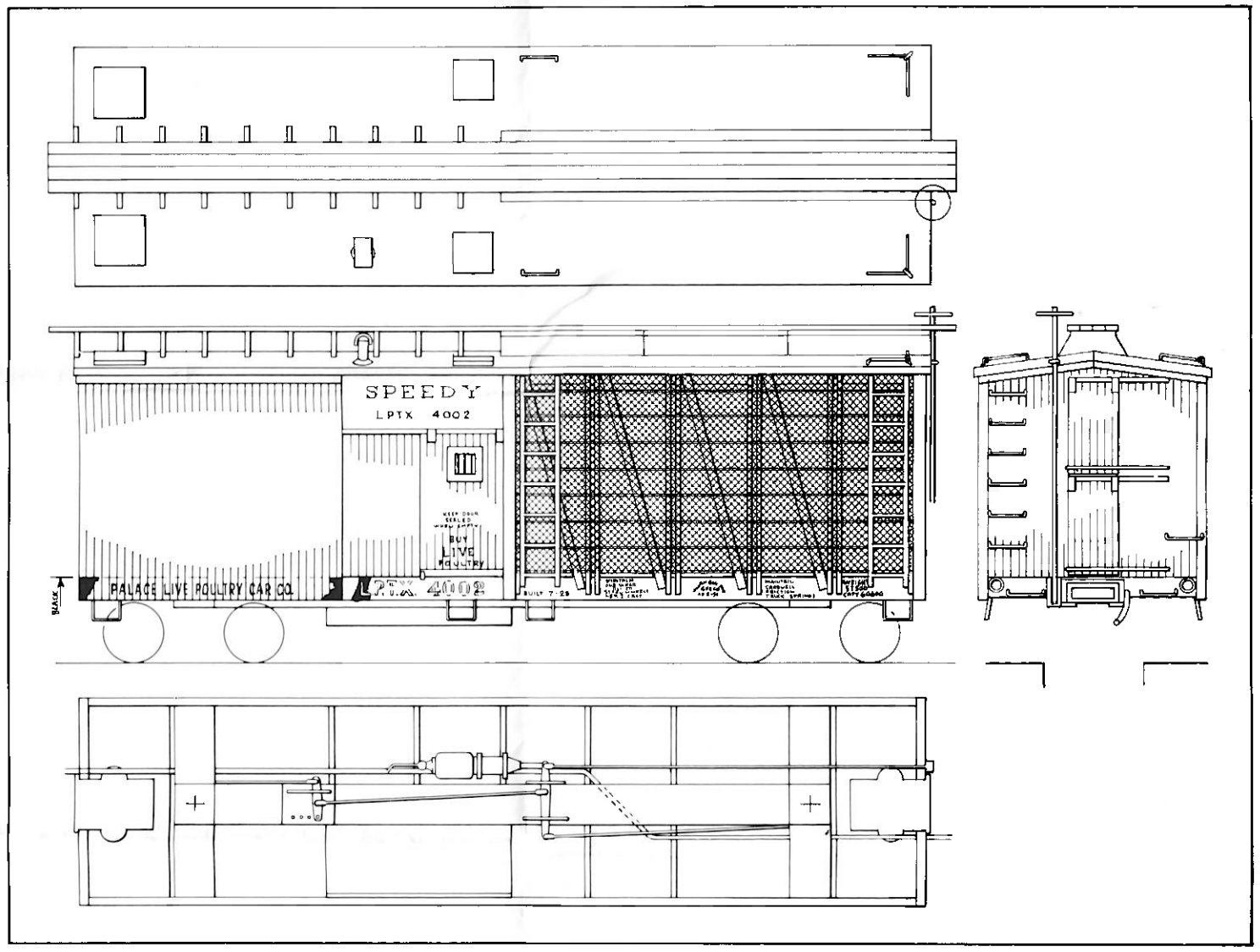

STRIPWOOD COLOR CODE

.025" x 3/64"....black
1/32" x 3/64"....blue
1/32" x 1/16"....red
1/32" x 5/64"....yellow

Because of the wide variety of couplers in use and the varied preferance for particular brands of trucks, these are not supplied in the kit.

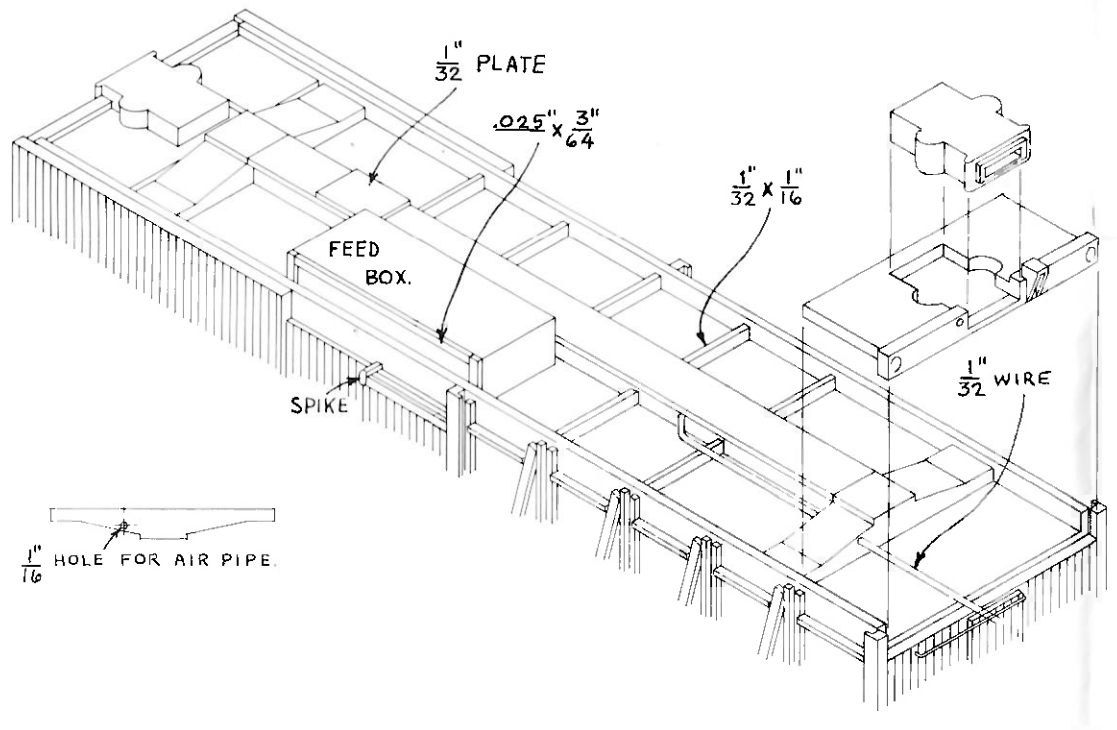

"SPEEDY" LIVE POULTRY AND REFRIGERATOR CAR

NORTHEASTERN Scale Models, Inc.
BOX 425 METHUEN, MASS. 01844

A surprising quantity of live poultry was transported by rail in specially designed cars in the '20's and '30's. Accordingly to a 1927 North American Car Corp. report, 600 Palace poultry cars were built, and this was just one design of several.

The present kit prototype, the "Speedy" combination live poultry and refrigerator car, was used for shipments to smaller communities that did not require a full carload of live poultry. The refrigerator section contained items such as butter, eggs and packaged poultry and poultry products.

Start construction by assembling the sub-floor, inner roof and the three bulkheads to make the basic frame. The dimensions shown for bulkhead locations are important, and care should be taken to get them accurate.

The floor board section is supplied already notched for the side bracing except for the end which is slightly oversize. Trim this flush with the sub-floor and cut the 3/64" x 3/64" notches. Cement the end sheathing in place and trim the top to match the inner roof.

Build up the rider's section. Note that the window in the door is slightly offset from center.

Cement the side braces in place, using the pre-cut notches in the floor board section as a guide. The interior of the car may be painted white at this point, except for the face of the bracing, which should be given a thin coat of cement.

Carefully cut the screening to fit the car sides. Temporarily pin to the side bracing. Using a fine brush, apply model airplane dope thinner, to which a small amount of cement has been added, to the screening where it contacts the bracing. Use as little as possible to avoid filling the screen mesh. Repeat with the horizontal wire strips. Be sure to allow space at each end for the special corner posts which should overlap the ends of the screening and wires.

The drawings clearly show the balance of the assembly. The color scheme for this car is: side sills and below, black; ends and roof, dark green; sides, white.

If any parts in this kit are missing or defective, or if you spoil a part, send to NORTHEASTERN SCALE MODELS, Inc., Ballard Vale, Mass. for free replacement.